a 白/White

http://bataf.blog.163.com/

Boot Fighter Black Selena

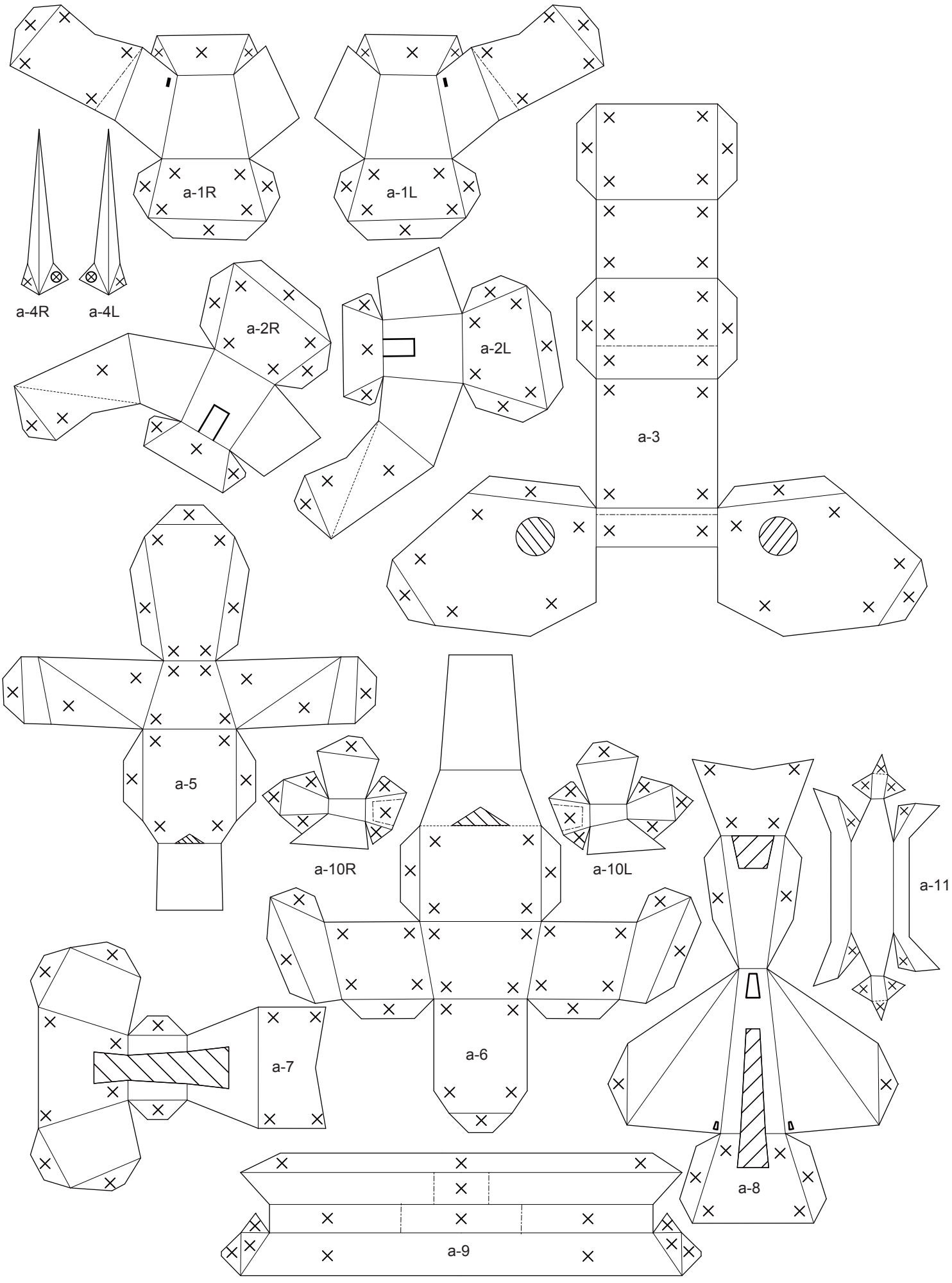

b 白/White

http://bataf.blog.163.com/

Boot Fighter Black Selena

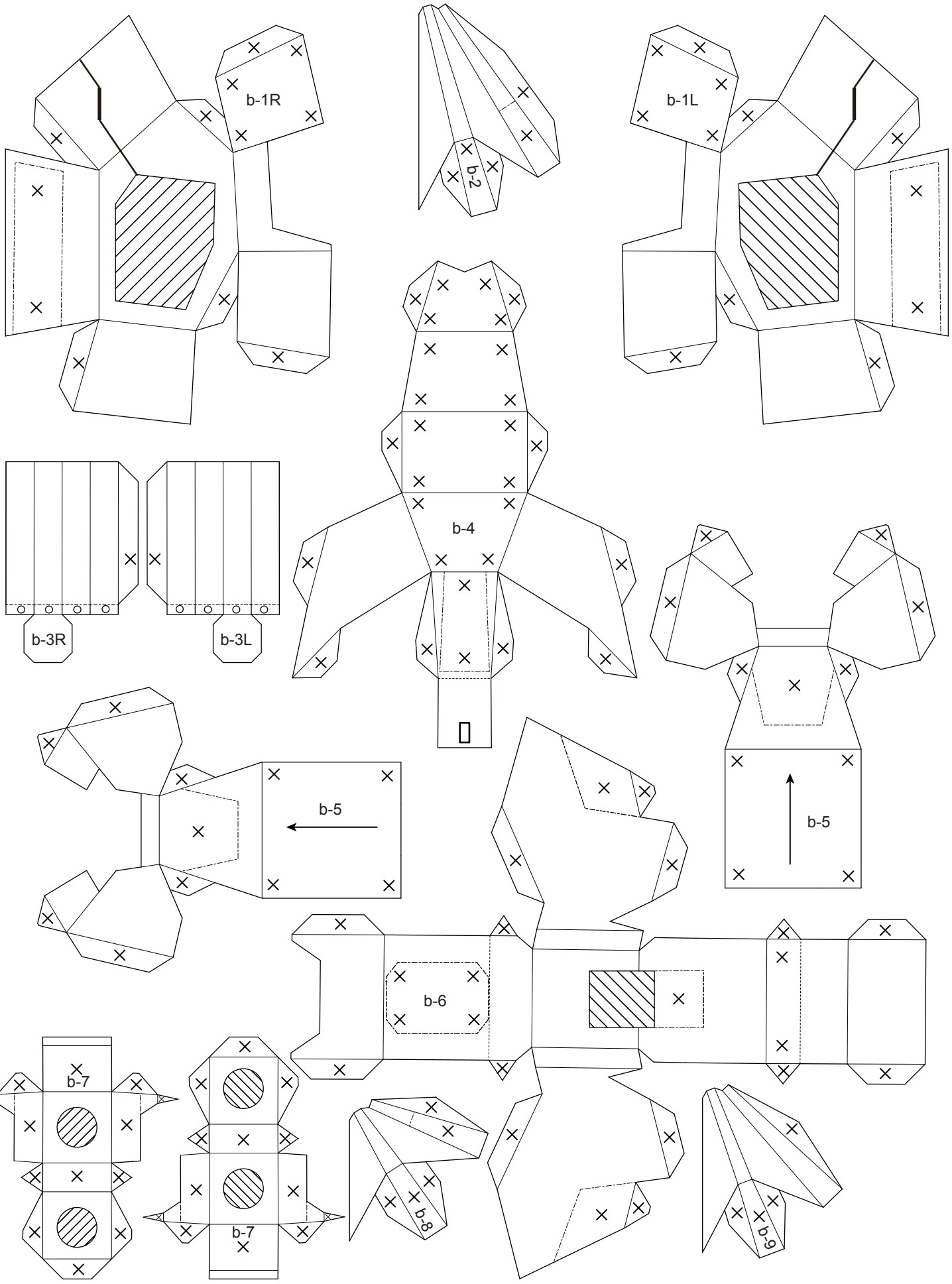

c 白/White http://bataf.blog.163.com/

Boot Fighter Black Selena

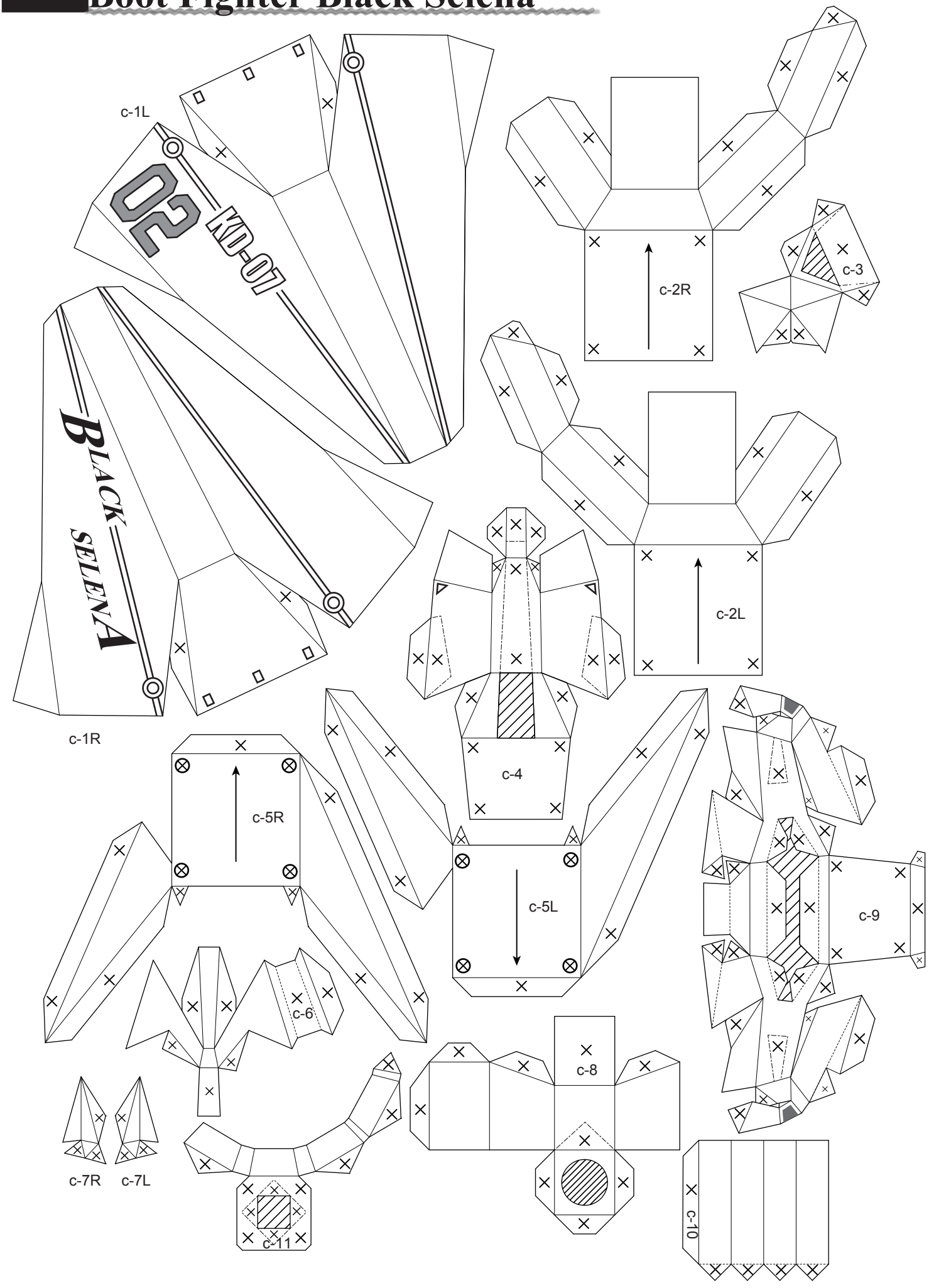

d 灰/Gray

http://bataf.blog.163.com/

Boot Fighter Black Selena

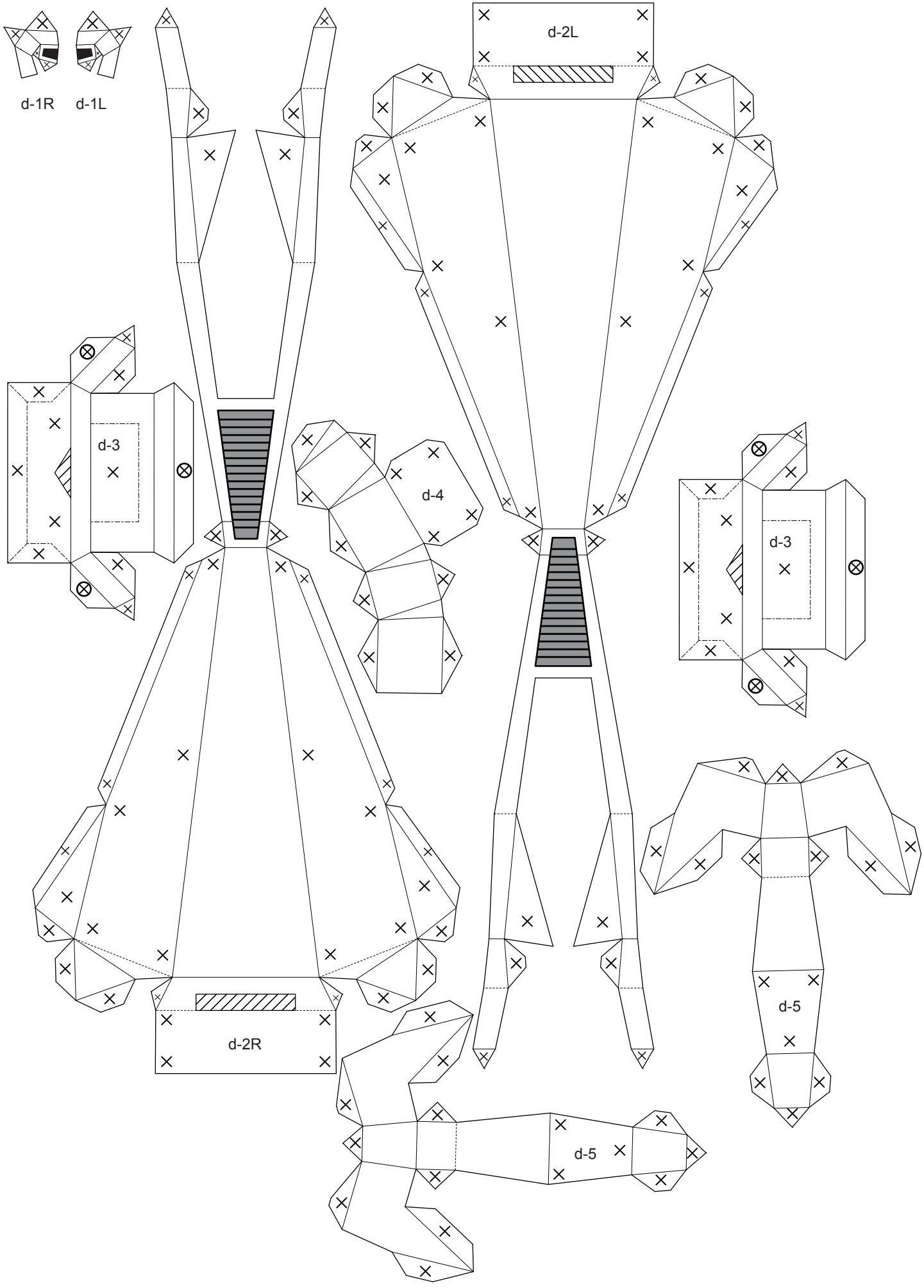

e 灰/Gray

http://bataf.blog.163.com/

Boot Fighter Black Selena

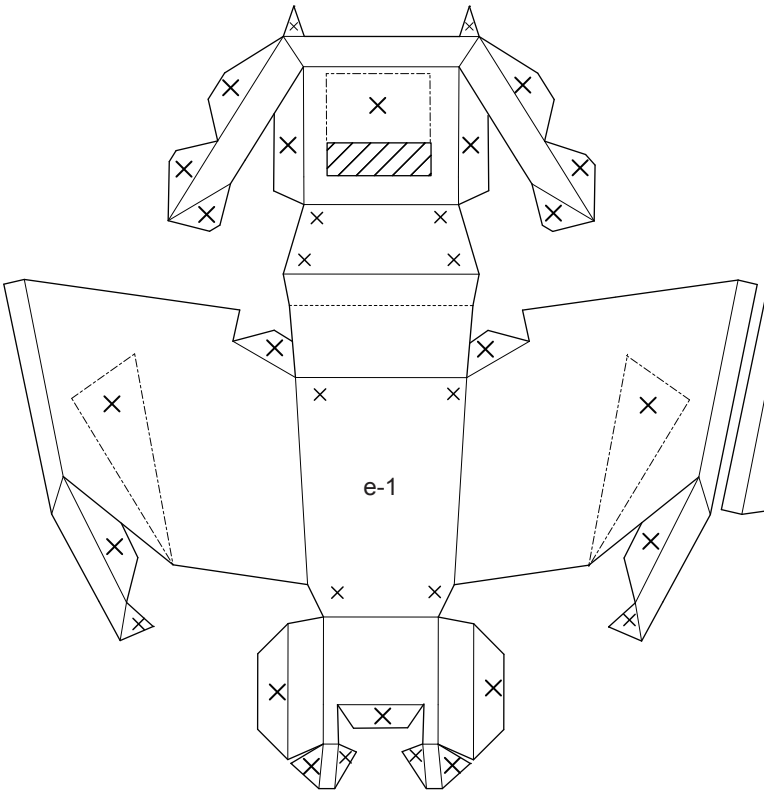

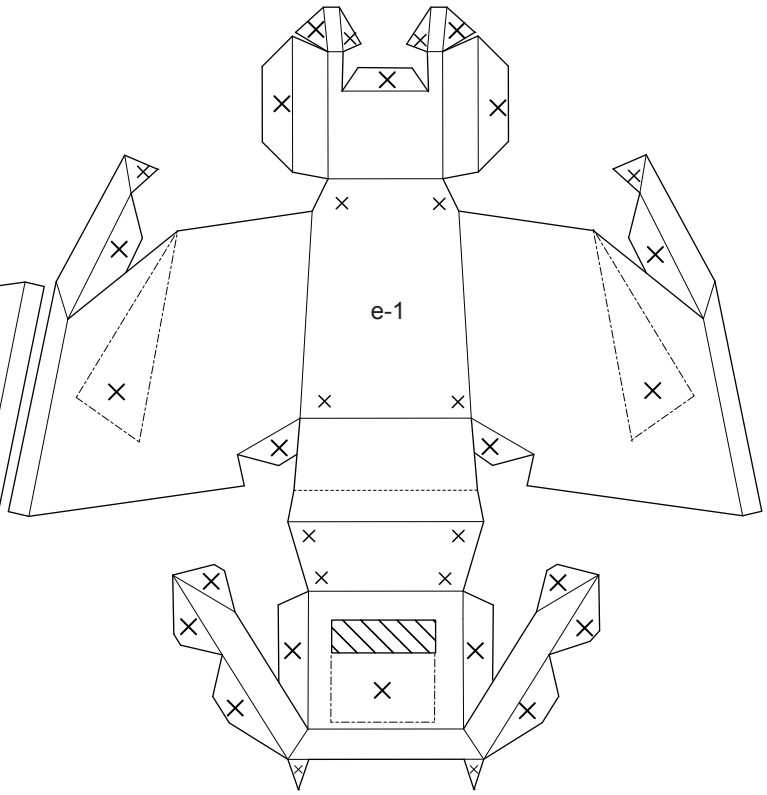

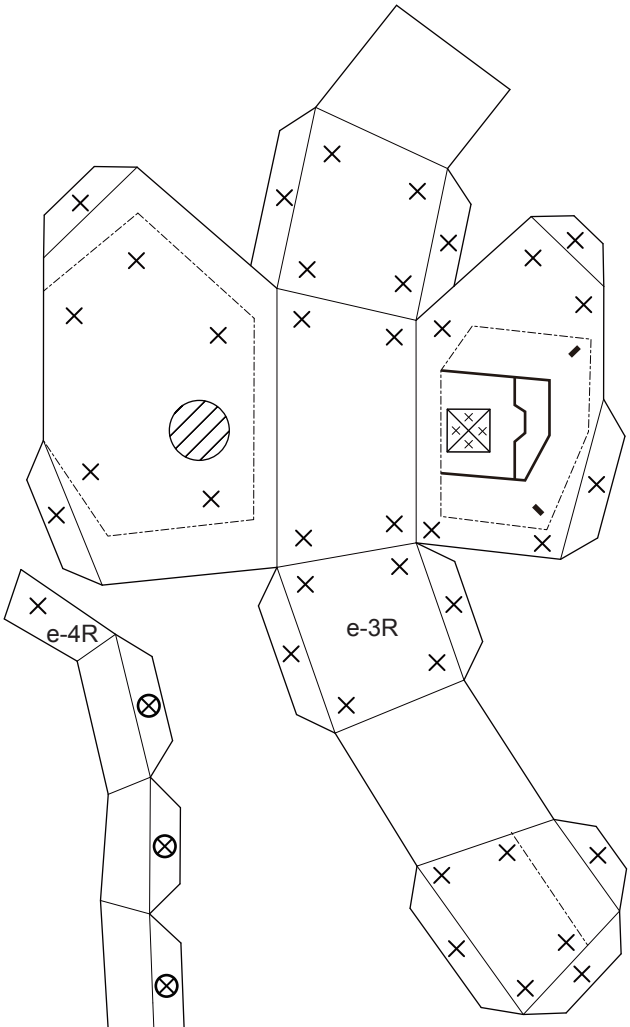

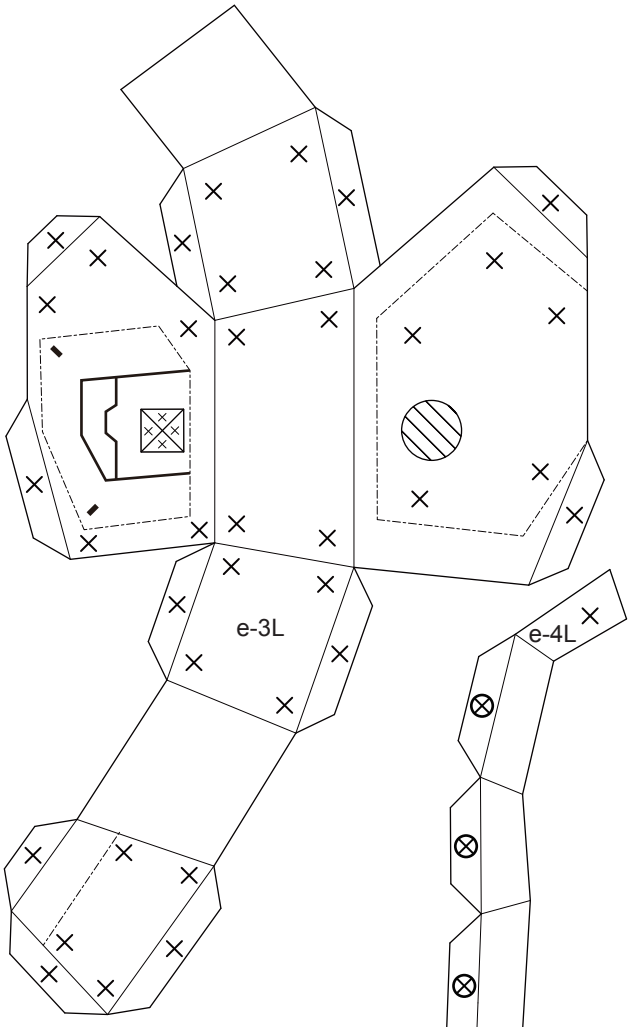

金/Gold
http://bataf.blog.163.com/

Boot Fighter Black Selena

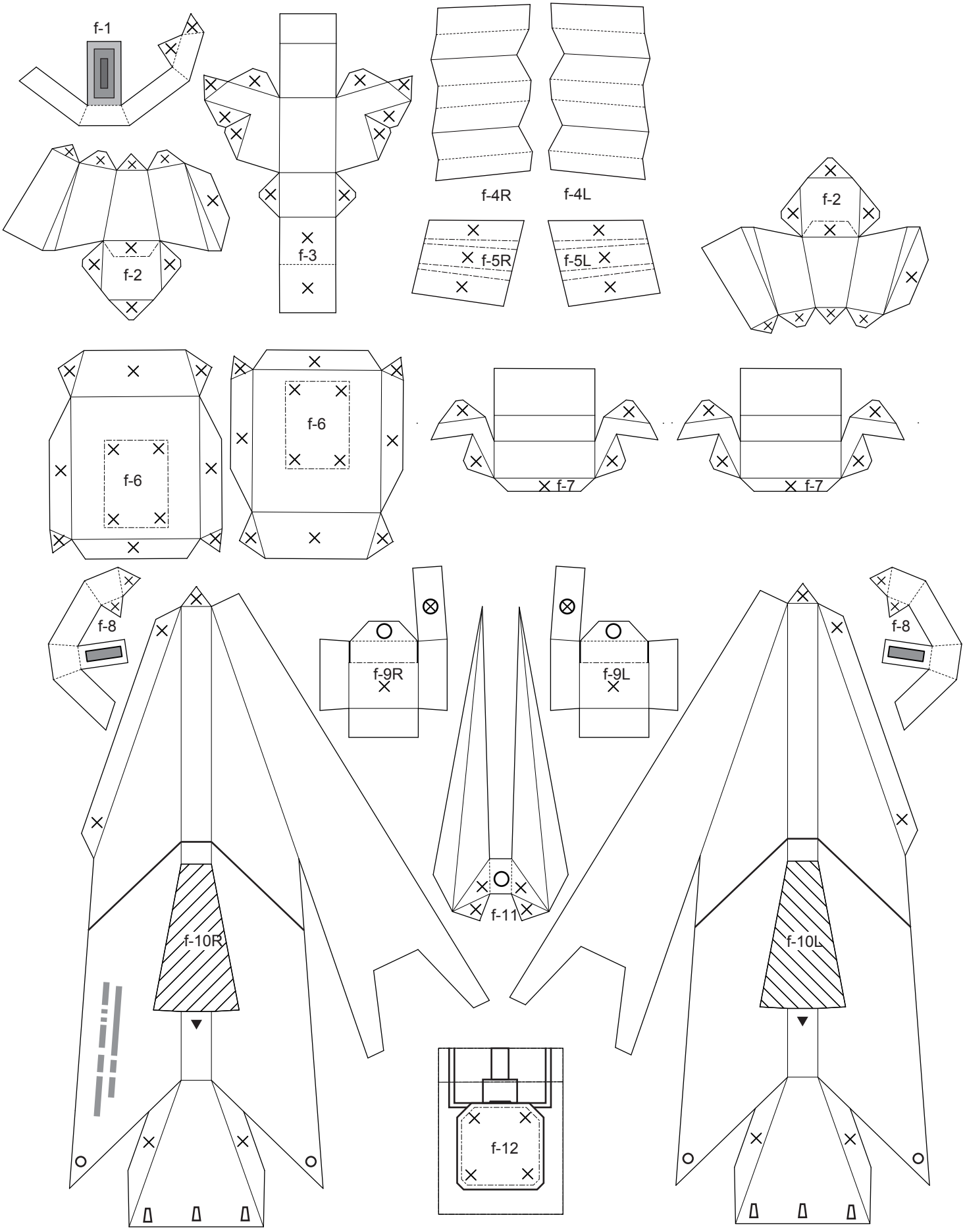

g 蓝/Blue

http://bataf.blog.163.com/

Boot Fighter Black Selena

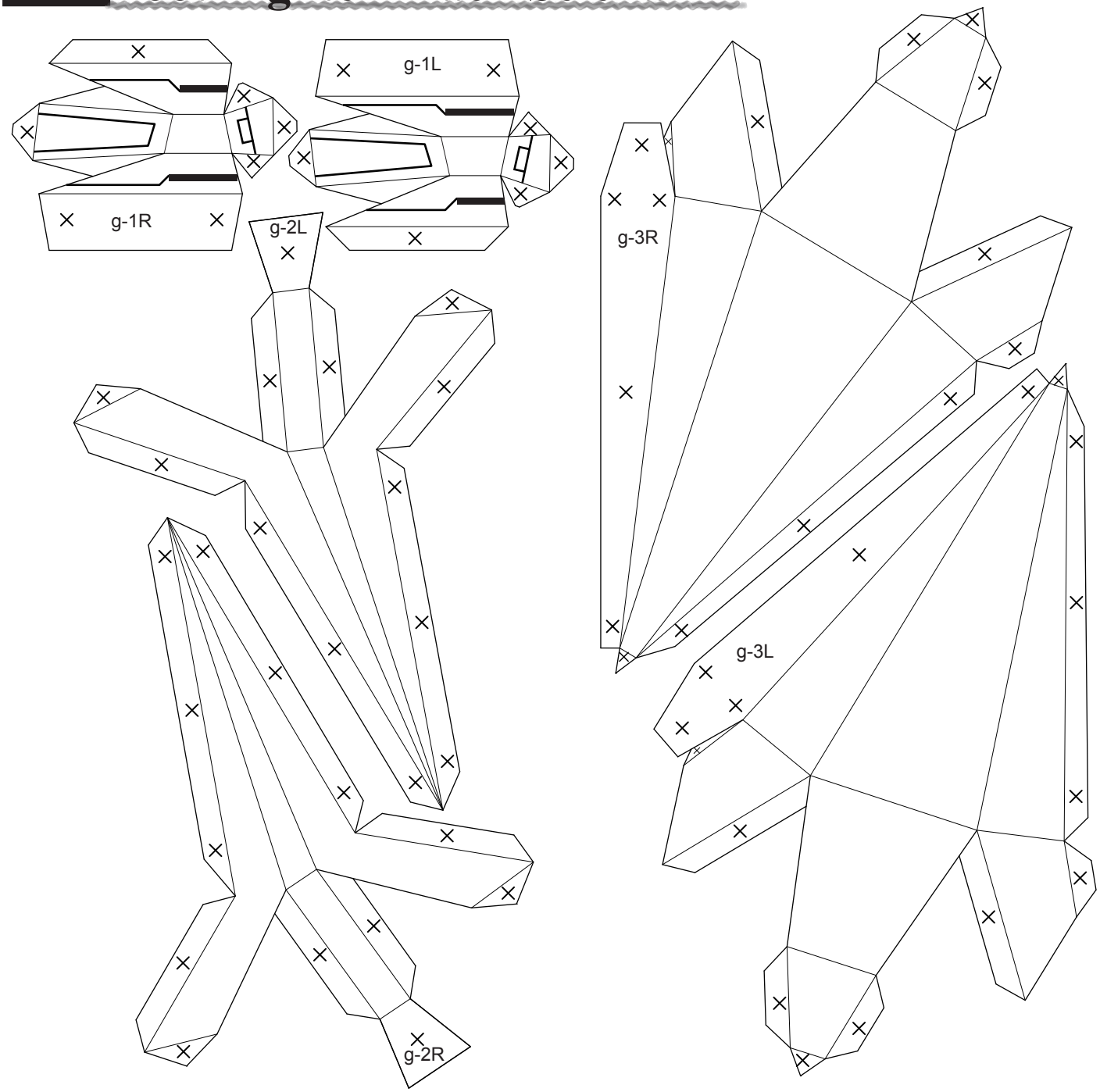

h 红/Red

http://bataf.blog.163.com/

Boot Fighter Black Selena

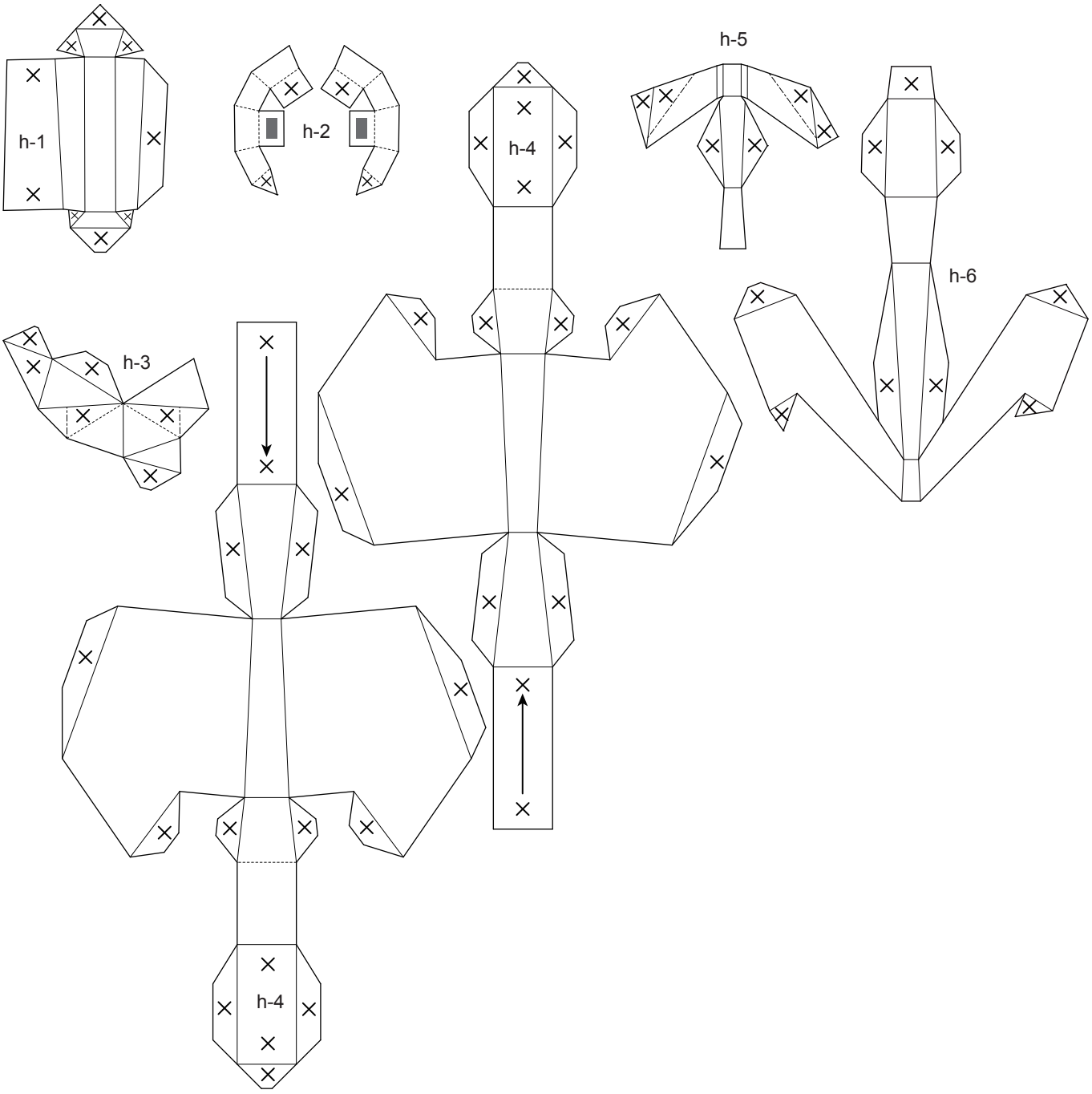

i 彩/Color

http://bataf.blog.163.com/

Boot Fighter Black Selena

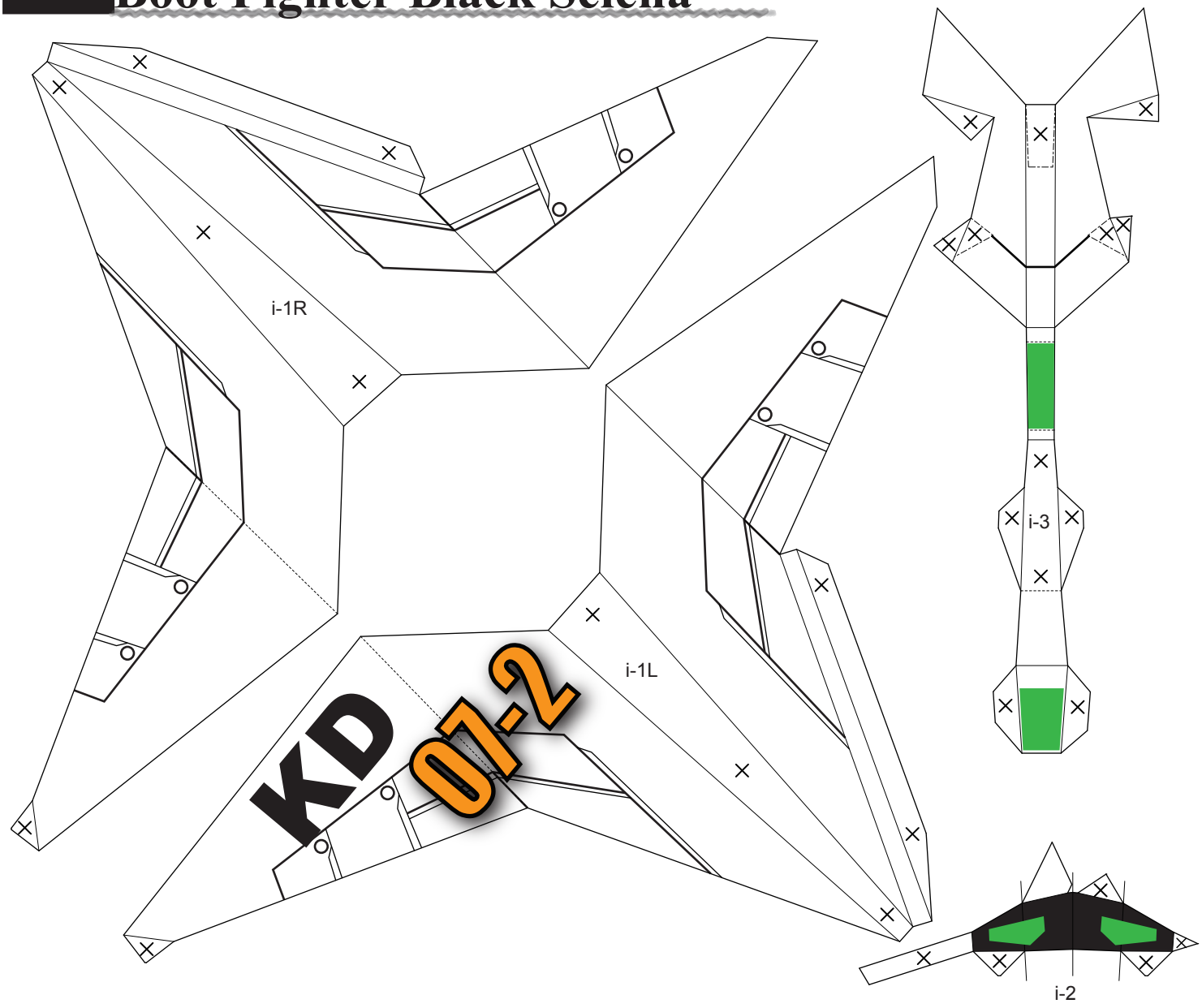

互动社区 PPXCLUB! 纸娱纸乐

BLACK SELENA —— *a Asd_fla's Paper Model*

MY ID:

http://bataf.blog.163.com/

胸像完成请附此卡片拍照以换取其他部分图纸